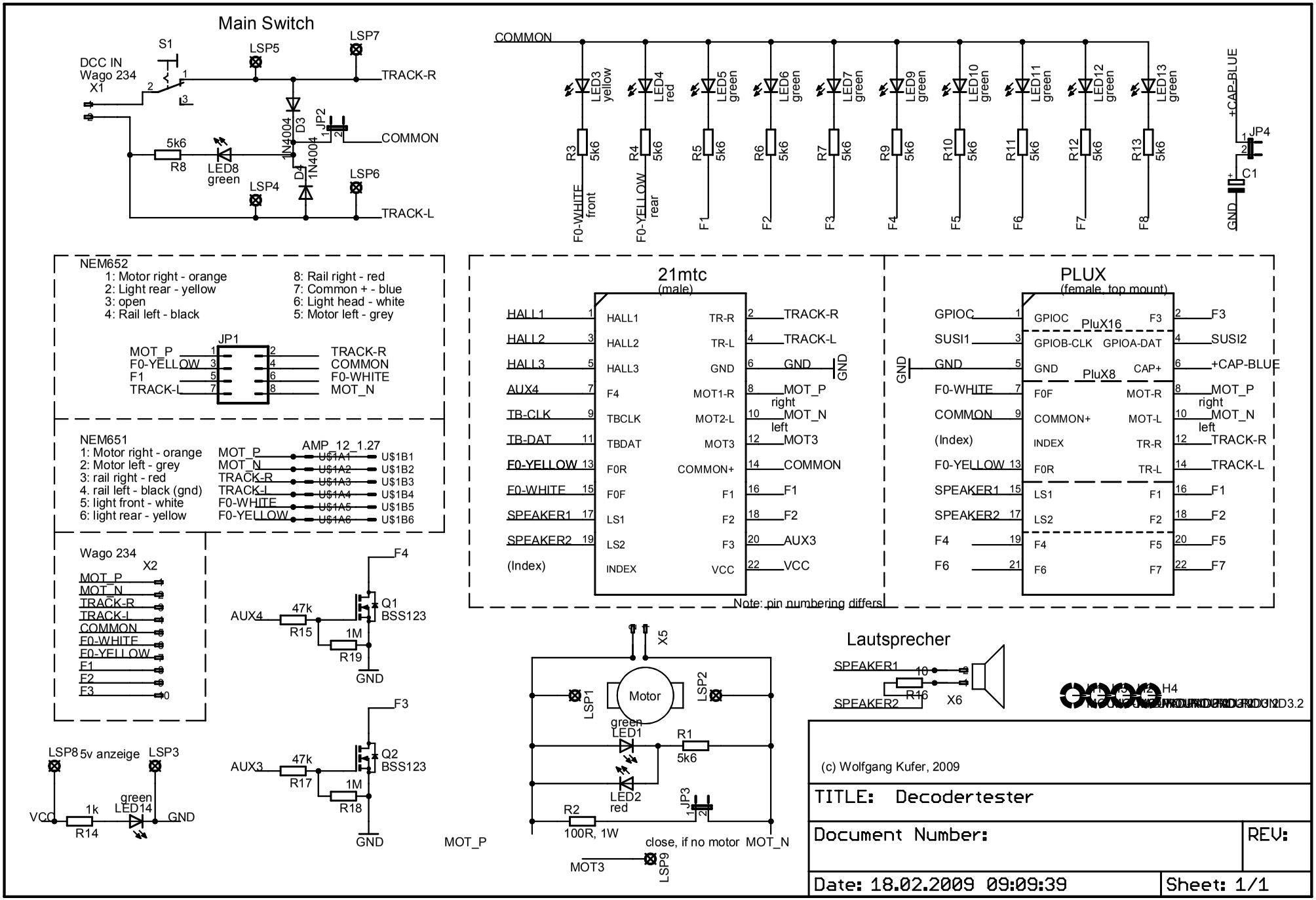
Main Switch
S1
DCC IN
Wago 234
X1
LSP5
LSP7
TRACK-R
COMMON
LSP4
LSP6
TRACK-L
5k6
R8
LED8
green
1N4004
D3
D4
JP2
COMMON
LED3 yellow
LED4 red
LED5 green
LED6 green
LED7 green
LED9 green
LED10 green
LED11 green
LED12 green
LED13 green
R3 5k6
R4 5k6
R5 5k6
R6 5k6
R7 5k6
R9 5k6
R10 5k6
R11 5k6
R12 5k6
R13 5k6
F0-WHITE front
F0-YELLOW rear
F1
F2
F3
F4
F5
F6
F7
F8
+CAP-BLUE
JP4
C1
GND
NEM652
1: Motor right - orange
2: Light rear - yellow
3: open
4: Rail left - black
8: Rail right - red
7: Common + - blue
6: Light head - white
5: Motor left - grey
JP1
MOT_P
F0-YELLOW
F1
TRACK-L
TRACK-R
COMMON
F0-WHITE
MOT_N
NEM651
1: Motor right - orange
2: Motor left - grey
3: rail right - red
4. rail left - black (gnd)
5: light front - white
6: light rear - yellow
AMP_12_1.27
MOT_P
MOT_N
TRACK-R
TRACK-L
F0-WHITE
F0-YELLOW
U$1A1
U$1A2
U$1A3
U$1A4
U$1A5
U$1A6
U$1B1
U$1B2
U$1B3
U$1B4
U$1B5
U$1B6
21mtc
(male)
HALL1
HALL2
HALL3
AUX4
TB-CLK
TB-DAT
F0-YELLOW
F0-WHITE
SPEAKER1
SPEAKER2
(Index)
TR-R
TR-L
GND
MOT1-R
MOT2-L
MOT3
COMMON+
F1
F2
F3
VCC
F4
TBCLK
TBDAT
F0R
F0F
LS1
LS2
INDEX
TRACK-R
TRACK-L
MOT_P
right
MOT_N
left
MOT3
COMMON
AUX3
Note: pin numbering differs
PLUX
(female, top mount)
GPIOC
SUSI1
GND
F0-WHITE
COMMON
(Index)
F0-YELLOW
SPEAKER1
SPEAKER2
F4
F6
PluX16
GPIOB-CLK
GPIOA-DAT
PluX8
CAP+
F0F
COMMON+
INDEX
F0R
LS1
LS2
MOT-R
MOT-L
TR-R
TR-L
F1
F2
F5
F7
SUSI2
+CAP-BLUE
Wago 234
X2
MOT_P
MOT_N
TRACK-R
TRACK-L
COMMON
F0-WHITE
F0-YELLOW
F1
F2
F3
AUX4
47k
R15
1M
R19
Q1
BSS123
F4
GND
AUX3
R17
R18
Q2
BSS123
F3
LSP8
5v anzeige
LSP3
VCC
1k
R14
green
LED14
X5
Motor
LSP1
LSP2
green
LED1
R1
5k6
LED2
red
JP3
R2
100R, 1W
close, if no motor
MOT_N
MOT3
LSP9
Lautsprecher
SPEAKER1
SPEAKER2
R16
X6
H4
(c) Wolfgang Kufer, 2009
TITLE: Decodertester
Document Number:
REV:
Date: 18.02.2009 09:09:39
Sheet: 1/1

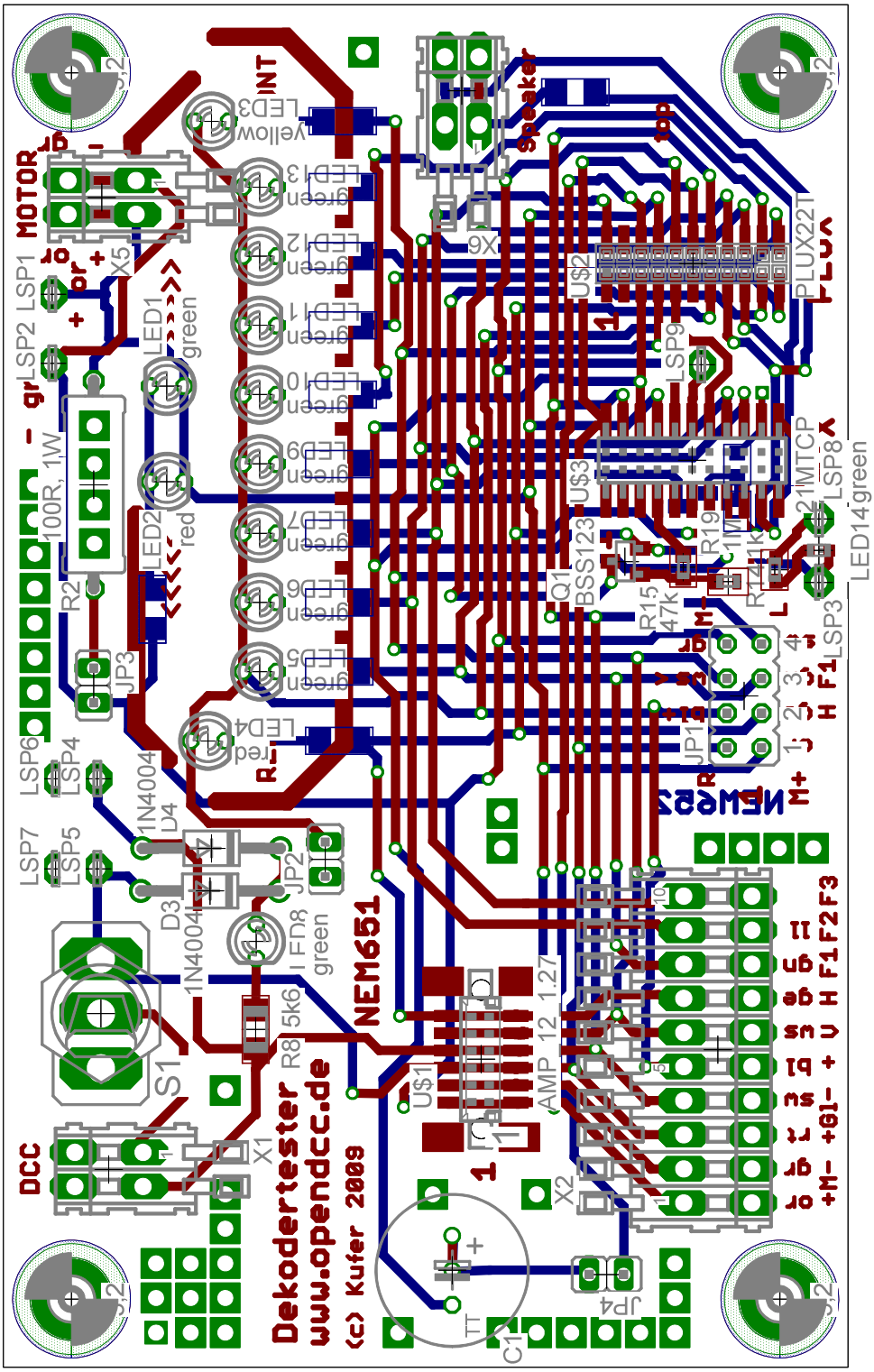

18.02.2009 09:29:30 f=2.00 D:\kufer\Projekt\Elektronik\Decodertester\Version 1\Decodertester.brd

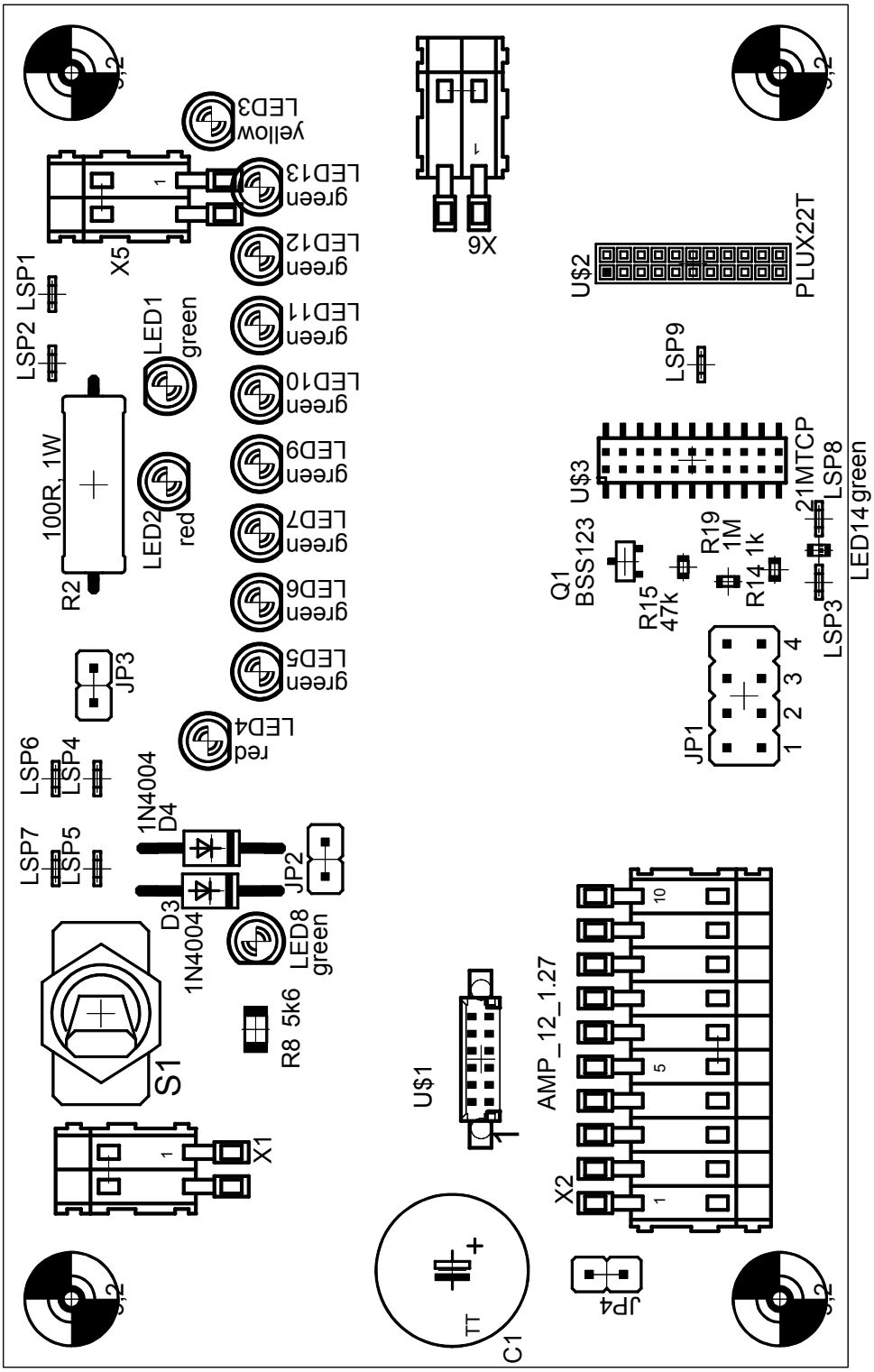

18.02.2009 09:30:30 f=2.00 D:\kufer\Projekt\Elektronik\Decodertester\Version 1\Decodertester.brd

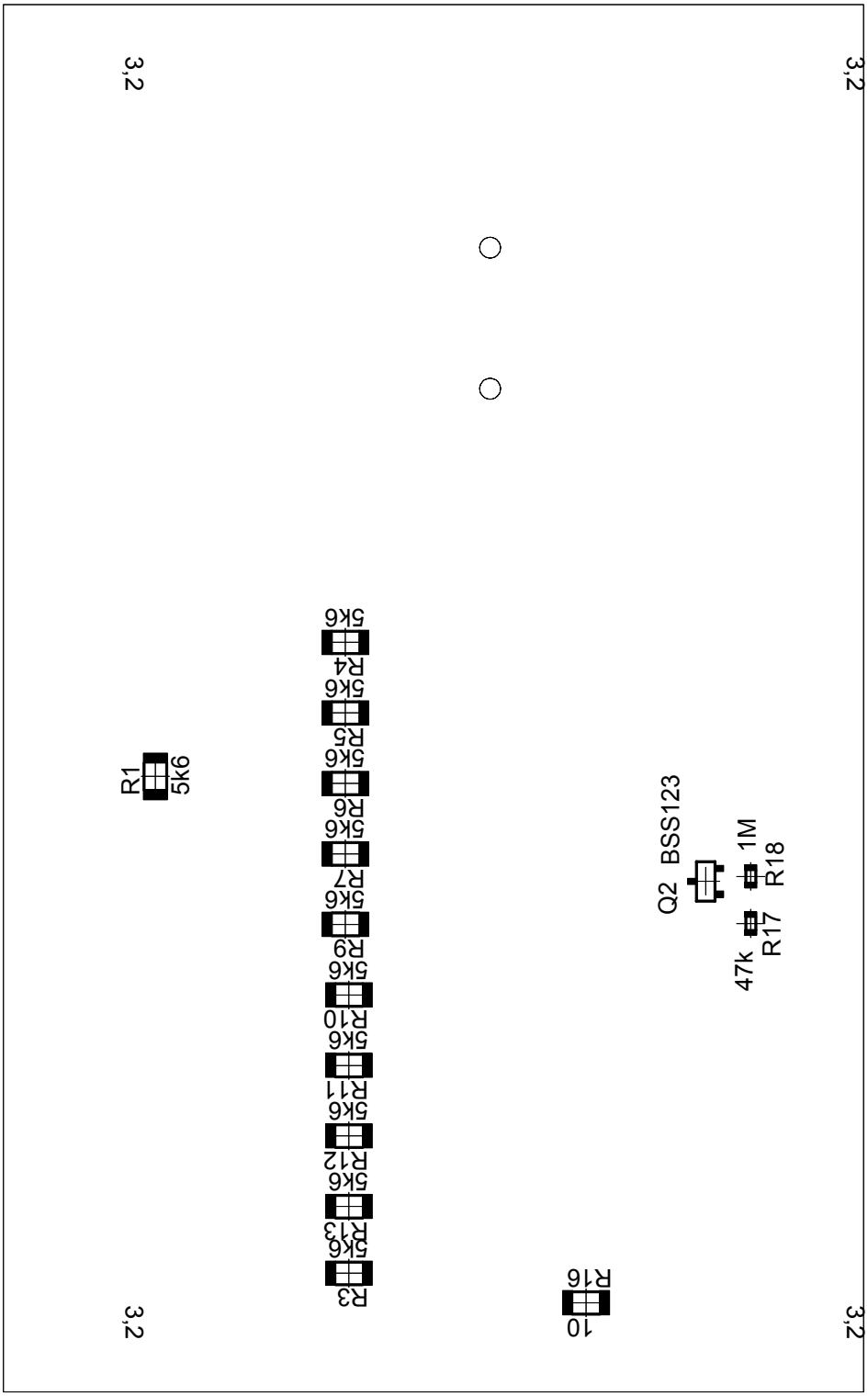

18.02.2009 09:31:26 f=2.00 mirrored D:\kufer\Projekt\Elektronik\Decodertester\Version 1\Decodertester.brd

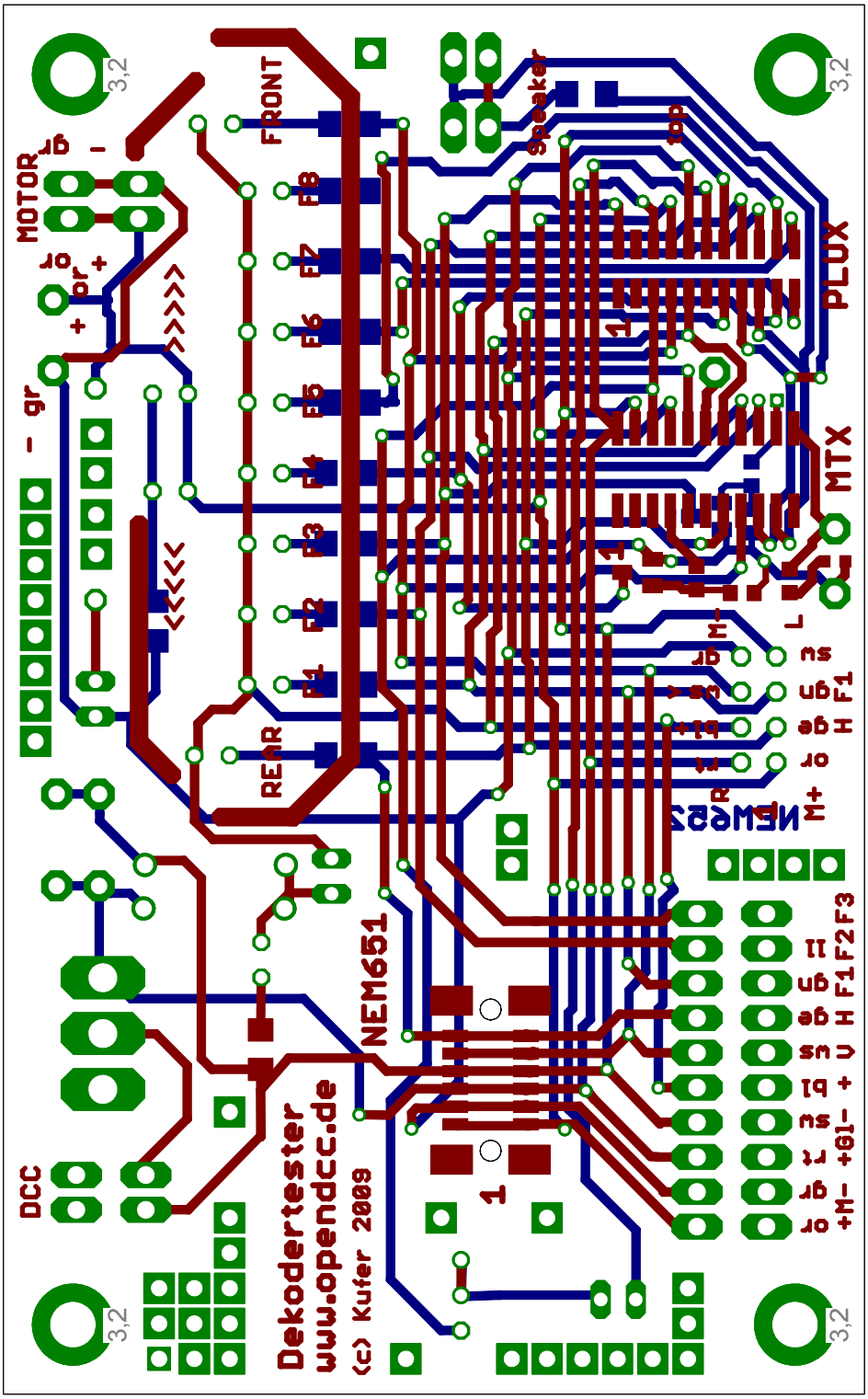
MOTOR
DCC
FRONT
REAR
NEM651
NEM652
Speaker
PLUX
MTX
Dekodertester
www.opendcc.de
(c) Kufer 2009
3,2